REVISIONS				
LTR	DESCRIPTION	DATE	REVISED BY	APPROVED
A	INITIAL RELEASE	8/17/04	R. NAGY	G. LANDIS

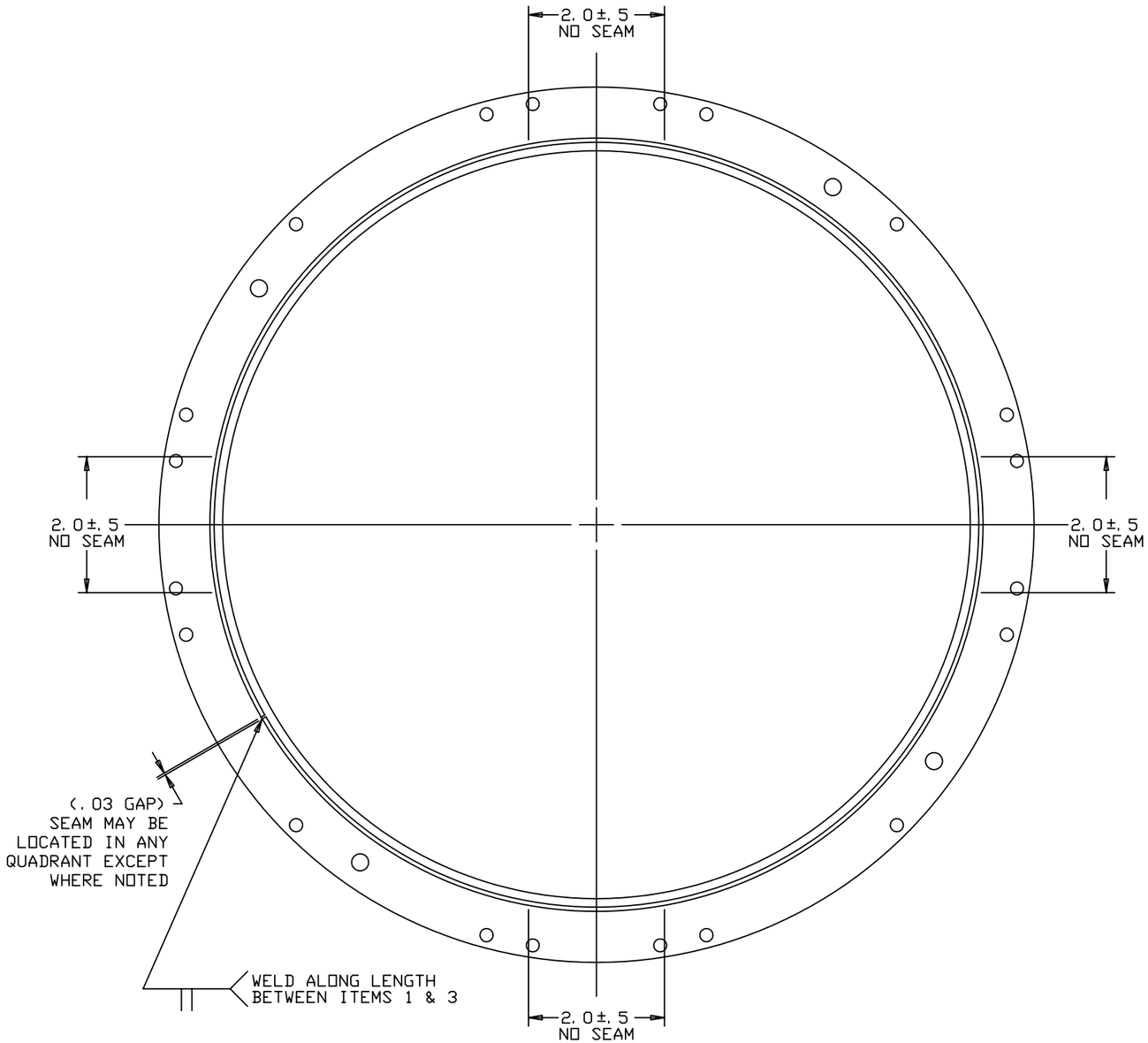

SECTION C-C

(SHT 1)
SCALE 1:1
LOCATION OF ITEM 2 SEAM

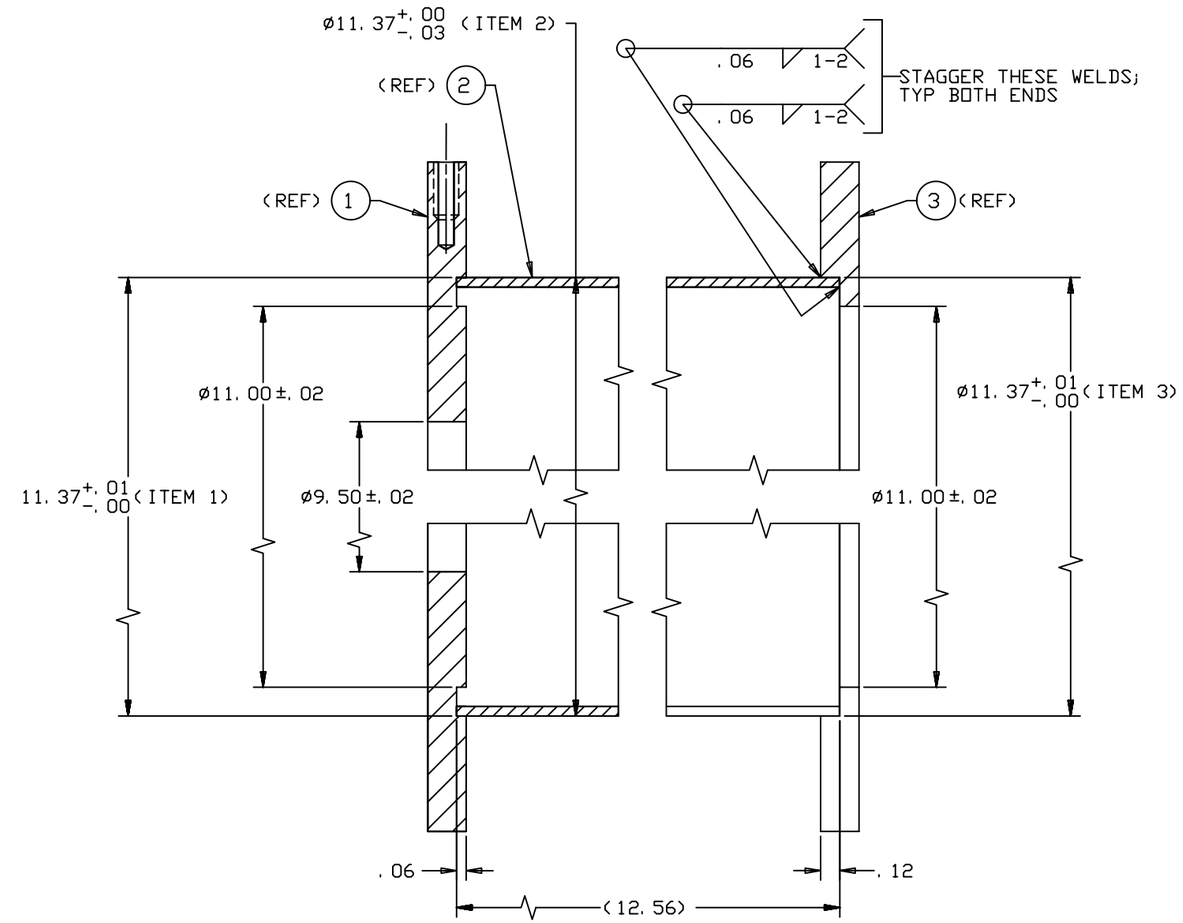

DETAIL D

(SHT 1)
SCALE 2:1

DO NOT SCALE DRAWING	THIS DRAWING CREATED IN:		
INTERPRET DIMENSIONS AND TOLERANCES IN ACCORDANCE WITH ASME Y14.5M-94	ACAD ☐	MECH ☐	IDEAS ☒
TOLERANCES UNLESS OTHERWISE SPECIFIED LINEAR: .X = NA, .XX = ±.01, .XXX = ±.005 ANGULAR: ± 1° DIAMETRICAL SEE SPEC S-002			
DIMENSIONS ARE IN INCHES / DIMENSIONS IN [ ] ARE METRIC			
MATERIAL INVAR 36 ALLOY	13560	MMT	
	NEXT ASSY	USED ON	
FINISH (6)	ASSEMBLY APPLICATION		

Steward Observatory, University of Arizona
933 N. Cherry Avenue, Tucson, AZ 85721 (520)621-7659

DESIGNED BY: D. DEAN	DATE: 11/19/03	CATEGORY: MMT	
DRAWN BY: R. NAGY	12/15/03	PROJECT: MAESTRO	
CHECKED BY: G. LANDIS	8/17/04	TITLE: LENS CAN-LENS 1 STAGE LENS 1 TO 2 SPOOL WELDMENT	
APPROVED: S. MATHEWS	8/17/04		
APPROVED: M. REED	8/17/04		
APPROVED: J. BECHTOLD	8/17/04	PLOT SIZE: D	SCALE: -
APPROVED:		DRAWING NUMBER: 13197	REVISION: A

CURRENT TIME/DATE/FILE LOCATION:
DRAWING ARCHIVE LOCATION: http://davinci.as.arizona.edu/acad/default.html

SHEET 4 OF 4