REVISIONS				
LTR	DESCRIPTION	DATE	REVISED BY	APPROVED
A	INITIAL RELEASE	3/7/06	R. NAGY	J. BECHTOLD

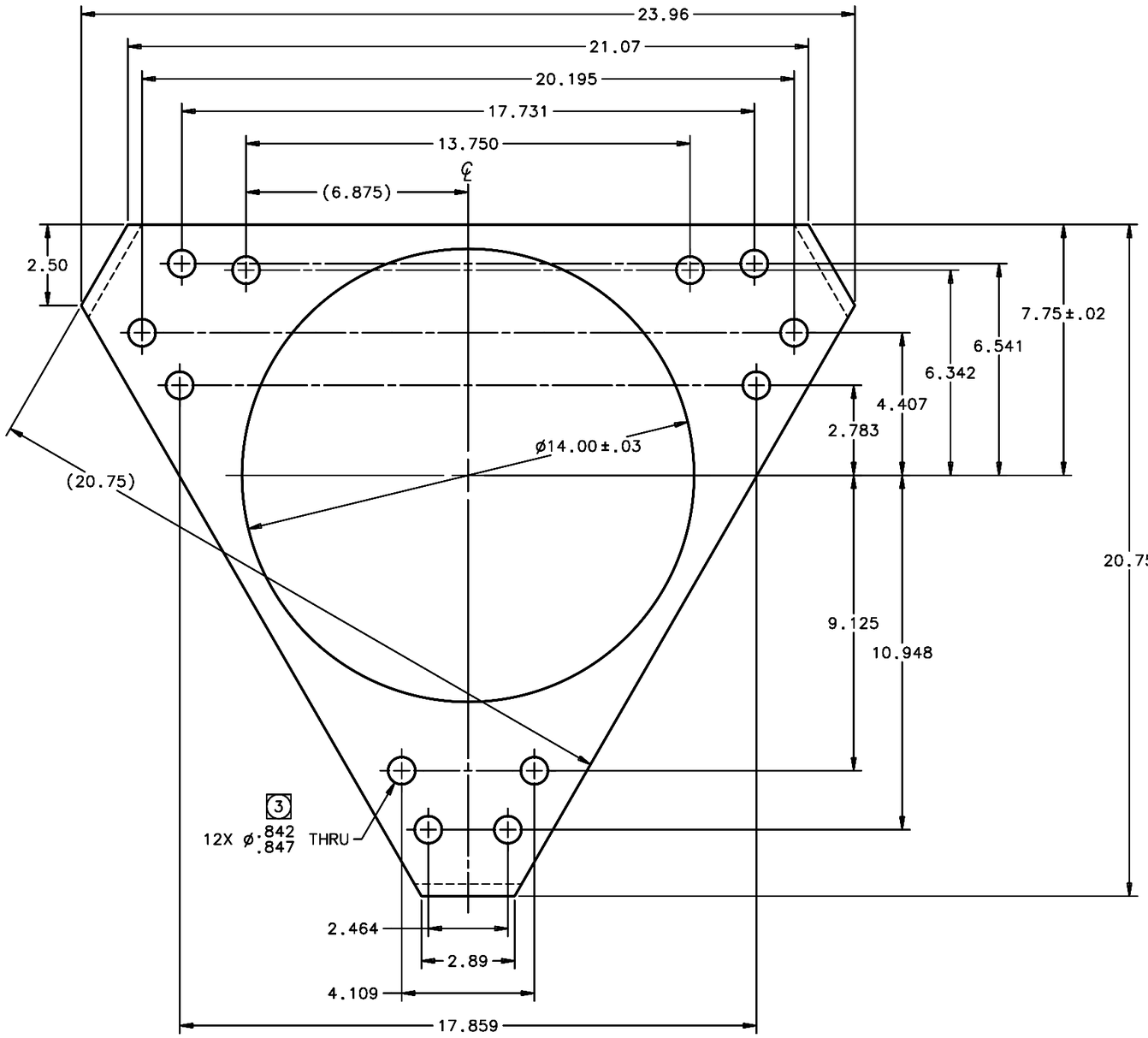

SCALE 1:2

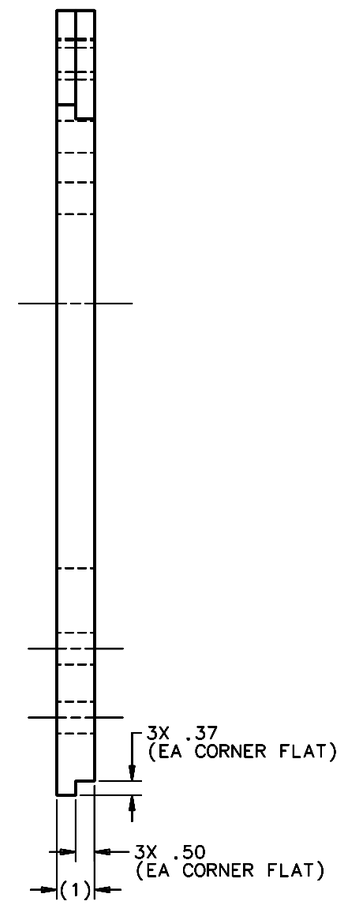

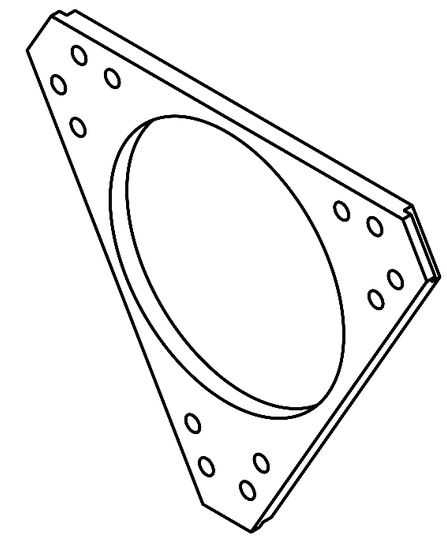

SCALE NTS

NOTES:

1 MATERIAL: MAKE FROM BLANK AS CUT FROM 13594 COMPOSITE PANEL PART LAYOUT.

2. BREAK SHARP EDGES & DEBURR HOLES.

3 NOTED HOLE IS FOR A MOLDED-IN NAS1834A6-1000 INSERT AS SPECIFIED PER NEXT ASSEMBLY: ALSO SEE DOCUMENT NO. SP14038 FOR ANY ADDITIONAL HOLE PREPARATION DATA.

4. QTY REQUIRED: 1.

DO NOT SCALE DRAWING

INTERPRET DIMENSIONS AND TOLERANCES IN ACCORDANCE WITH ASME Y14.5M-94

TOLERANCES UNLESS OTHERWISE SPECIFIED

LINEAR	ANGULAR
.X = NA	± 1°
.XX = ±.03	
.XXX = ±.020	

DIAMETRICAL SEE SPEC S-002

DIMENSIONS ARE IN INCHES / DIMENSIONS IN [ ] ARE METRIC

MATERIAL

1

FINISH NONE

THIS DRAWING CREATED IN: ACAD ☐ MECH ☐ IDEAS ☒

NEXT ASSY	USED ON
13456	MMT-MAESTRO

ASSEMBLY APPLICATION

Steward Observatory, University of Arizona
933 N. Cherry Avenue, Tucson, AZ 85721 (520)621-7659

DESIGNED BY: D. DEAN/R. NAGY	DATE: 1/12/03	CATEGORY: MMT
DRAWN BY: R. NAGY	1/12/03	PROJECT: MAESTRO
CHECKED BY: W. DAVISON	2/28/06	TITLE: LENS CAN SUPPORT LENS CAN BULKHEAD PANEL W/NOTCHES (W/O INSERTS)
APPROVED: J. BECHTOLD	3/7/06	
APPROVED:		
APPROVED:		
APPROVED:		

PLOT SIZE	SCALE:	DRAWING NUMBER:	REVISION:
D	-	16154	A

CURRENT TIME/DATE/FILE LOCATION:

DRAWING ARCHIVE LOCATION: http://davinci.as.arizona.edu/acad/default.html

SHEET 1 OF 1