REVISIONS				
LTR	DESCRIPTION	DATE	REVISED BY	APPROVED
A	INITIAL RELEASE	03/29/05	J. BRENNAN	G. LANDIS
B	ADDED SLIT HOLDER GUIDE BLOCK (ITEM 27)	06/06/05	J. BRENNAN	D. DEAN

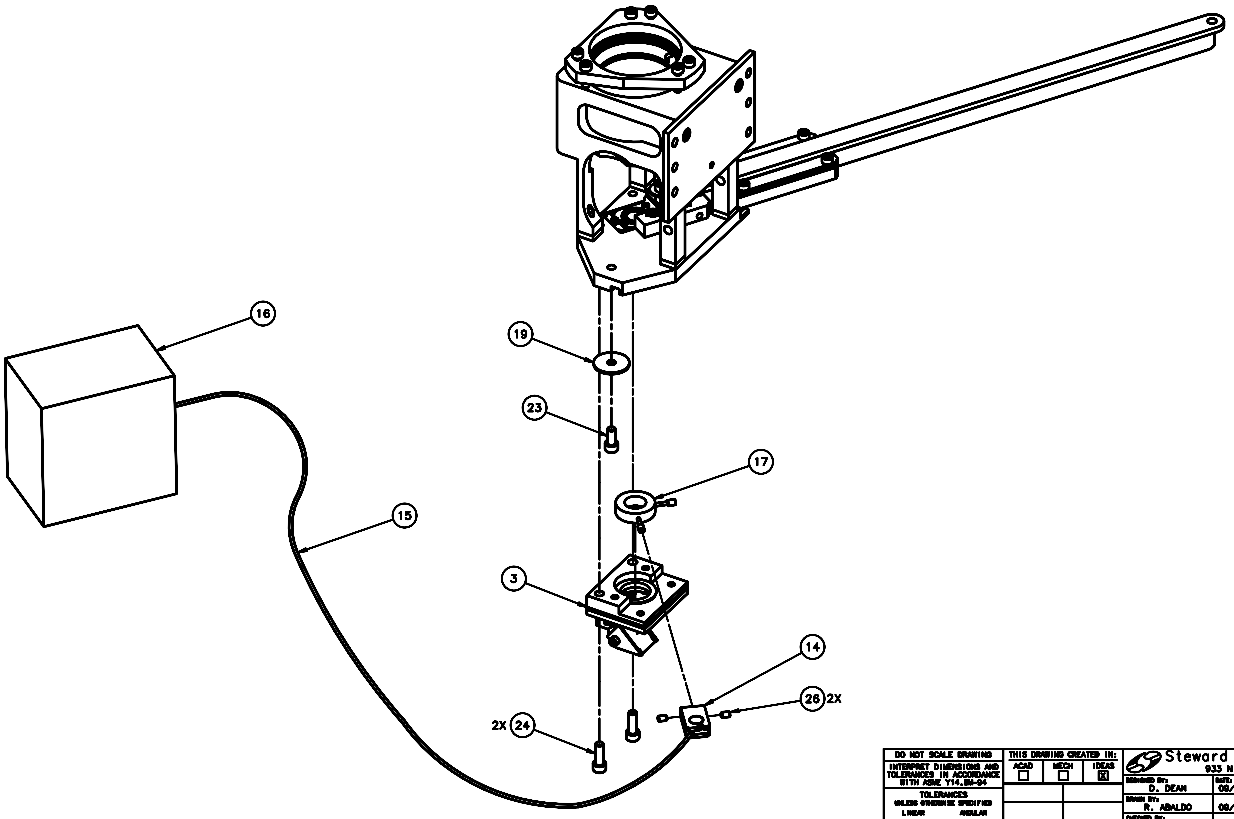

SCALE 1:1

DO NOT SCALE DRAWING	THIS DRAWING CREATED IN:	Steward Observatory, University of Arizona 933 N. Cherry Avenue, Tucson, AZ 85721 (520)621-7659	
INTERPRET DIMENSIONS AND TOLERANCES IN ACCORDANCE WITH ASME Y14.5M-94	ACAD ☐ MECH ☐ IDEAS ☒	DESIGNED BY: D. DEAN DATE: 09/27/04	SIGNATURE: MMT
TOLERANCES UNLESS OTHERWISE SPECIFIED LINEAR ± ± ± ± ± ANGULAR ± °		DRAWN BY: R. ABALDO 09/27/04	PROJECT: MAESTRO
		CHECKED BY: G. LANDIS 09/27/04	TITLE: INJECTION OPTICS ASSEMBLY
DIMENSIONAL SEE SPEC S-002		APPROVED: M. REED 09/27/04	
		APPROVED: J. BECHTOLD 09/27/04	
MATERIAL	14268 MMT-MAESTRO	APPROVED: R. WARNER 09/27/04	PLOT SIZE: D SCALE: - DRAWING NUMBER: 14268 REVISION: B
	NEXT ASSY USED ON	APPROVED:	
FINISH	ASSEMBLY APPLICATION	CURRENT TIME/DATE/FILE LOCATION:	SHEET 3 OF 3
		DRAWING ARCHIVE LOCATION: http://dwfnet.ca.arizona.edu/mmt/dwfnet.html	