REVISIONS				
LTR	DESCRIPTION	DATE	REVISED BY	APPROVED
A	INITIAL RELEASE	03/29/05	J. BREHMAN	G. LANDIS

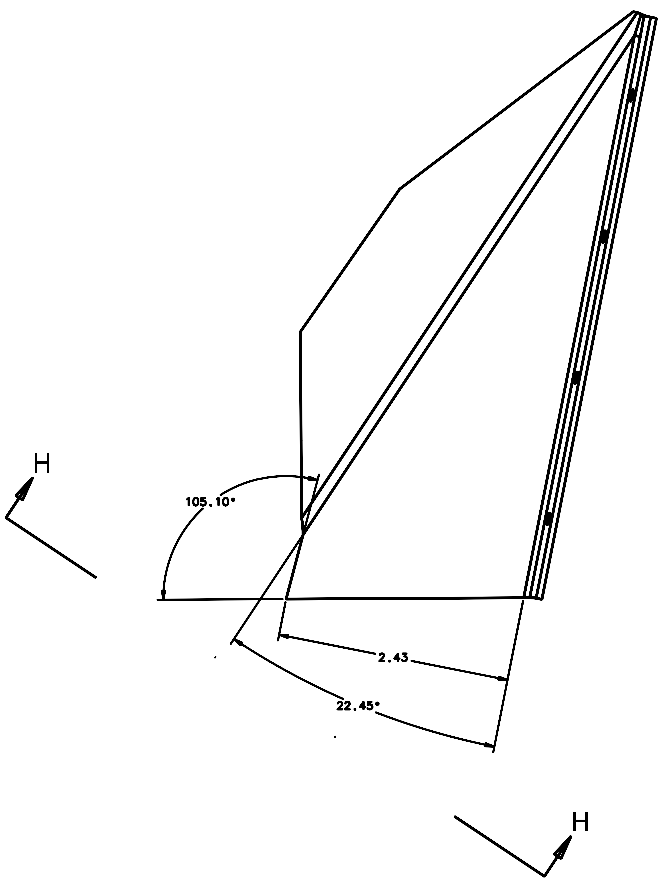

VIEW G-G SHT 13

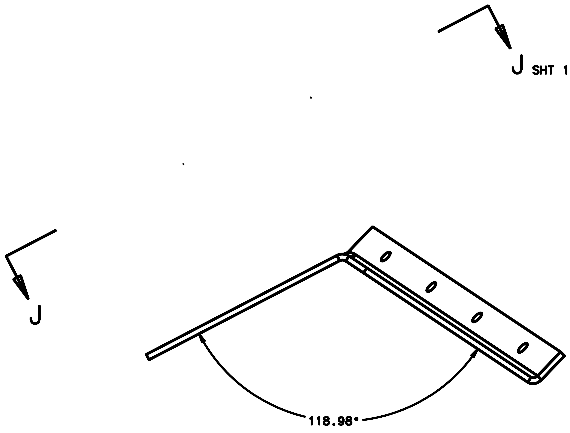

VIEW H-H

SCALE 1:1

DO NOT SCALE DRAWING	THIS DRAWING CREATED IN:	Steward Observatory, University of Arizona 933 N. Cherry Avenue, Tucson, AZ 85721 (520)621-7659	
INTERPRET DIMENSIONS AND TOLERANCES IN ACCORDANCE WITH ASME Y14.5M-94	ACAD ☐ MECH ☐ IDEAS ☒	DESIGNED BY: D. DEAN DATE: 10/27/04	SUBMITTED: MMT
TOLERANCES UNLESS OTHERWISE SPECIFIED LINEAR .X ± .XX ± .XXX ± 0.005 ANGULAR ± 1° DIMENSIONAL SEE SPEC S-002		DRAWN BY: R. ABALDO 10/27/04	PROJECT: MAESTRO
		CHECKED BY: G. LANDIS 10/27/04	TITLE: INJECTION OPTICS MOUNTING BOX
		APPROVED: M. REED 10/27/04	
MATERIAL INVAR 36 ALLOY	14200 MMT-MAESTRO	APPROVED:	PLOT SIZE: D SCALE: - DRAWING NUMBER: 14267 REVISION: A
	NEXT ASSY USED ON	APPROVED:	
FINISH 4	ASSEMBLY APPLICATION	CURRENT TIME/DATE/FILE LOCATION:	SHEET 14 OF 20
		DRAWING ARCHIVE LOCATION: http://dwfnet.ca.arizona.edu/mmt/default.html	