REVISIONS				
LTR	DESCRIPTION	DATE	REVISED BY	APPROVED
A	INITIAL RELEASE	03/29/05	J. BREHAN	G. LANDIS

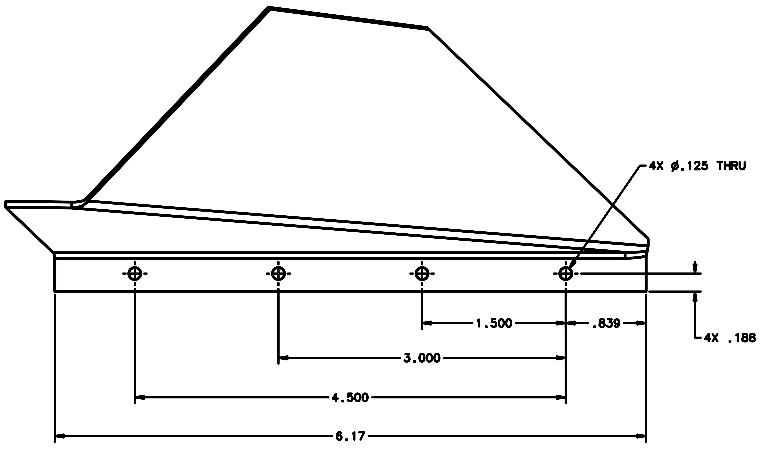

(2) INJECTION OPTICS MOUNTING BOX PLATE 2

SCALE 2:1

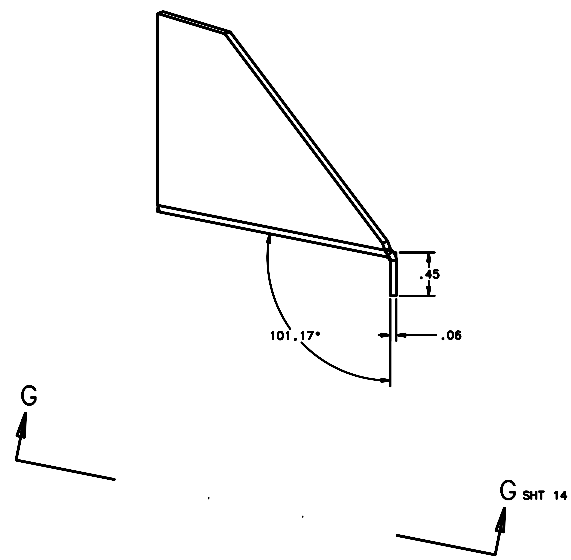

DO NOT SCALE DRAWING INTERPRET DIMENSIONS AND TOLERANCES IN ACCORDANCE WITH ASME Y14.5M-94 TOLERANCES UNLESS OTHERWISE SPECIFIED LINEAR ANGULAR .X ± ± ± 1° .XX ± 0.05 .XXX ± 0.005 DIMENSIONAL SEE SPEC S-002 DO NOT SCALE DRAWING SIZE IN INCHES	THIS DRAWING CREATED IN: ACAD ☐ MECH ☐ IDEAS ☒	Steward Observatory, University of Arizona 933 N. Cherry Avenue, Tucson, AZ 85721 (520)621-7659	
		DESIGNED BY: D. DEAN DATE: 10/27/04	SUBMITTED: MMT
		DRAWN BY: R. ABALDO 10/27/04	PROJECT: MAESTRO
		CHECKED BY: G. LANDIS 10/27/04	TITLE: INJECTION OPTICS MOUNTING BOX
		APPROVED: M. REED 10/27/04	
MATERIAL INVAR 36 ALLOY	14200 MMT-MAESTRO NEXT ASSY USED ON	APPROVED:	PLOT SIZE: D SCALE: - DRAWING NUMBER: 14267 REVISION: A
FINISH (4)	ASSEMBLY APPLICATION	CURRENT TIME/DATE/FILE LOCATION: DRAWING ARCHIVE LOCATION: http://dwfnet.ca.arizona.edu/mmt/dwfnet.html	SHEET 13 OF 20