REVISIONS				
LTR	DESCRIPTION	DATE	REVISED BY	APPROVED
A	INITIAL RELEASE	03/29/05	J. BRENNAN	G. LANDIS
B	ADDED TWO ø.164-32 UNC-2B HOLES	05/04/05	J. BRENNAN	D. DEAN

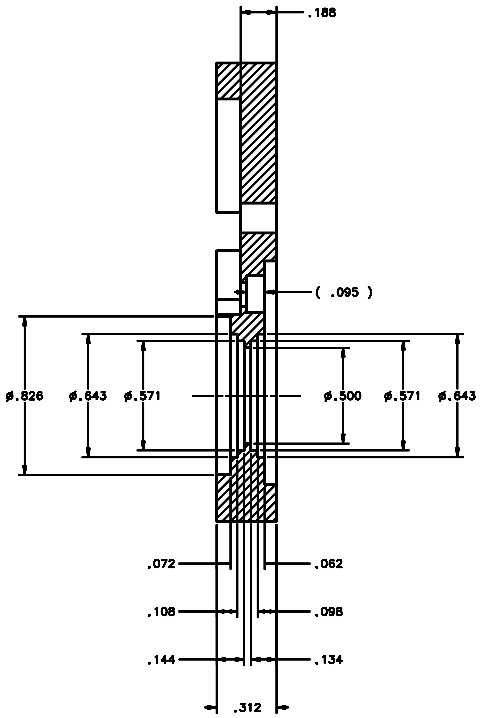

SECTION A-A

SHT 1

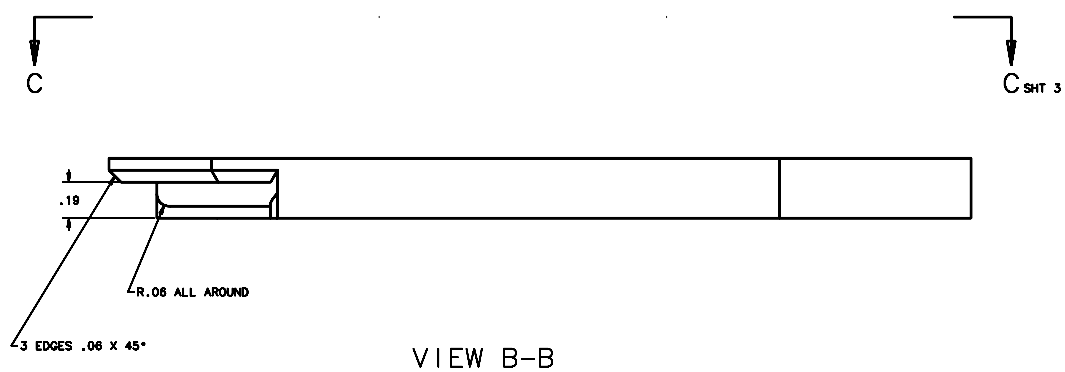

VIEW B-B

SHT 1
SCALE 1:1

DO NOT SCALE DRAWING INTERPRET DIMENSIONS AND TOLERANCES IN ACCORDANCE WITH ASME Y14.5M-94 TOLERANCES UNLESS OTHERWISE SPECIFIED LINEAR .X ± .XX ± .XXX ± 0.005 ANGULAR ± 1° DIMENSIONAL SEE SPEC S-002 DO NOT SCALE DRAWING MATERIAL AL ALLOY 6061-T6 FINISH 4	THIS DRAWING CREATED IN: ACAD ☐ MECH ☐ IDEAS ☒ 14268 MMT-MAESTRO NEXT ASSY USED ON ASSEMBLY APPLICATION	Steward Observatory, University of Arizona 933 N. Cherry Avenue, Tucson, AZ 85721 (520)621-7659 DRAWN BY: D. DEAN DATE: 09/27/04 DESIGNED BY: R. ABALDO 09/27/04 CHECKED BY: G. LANDIS 03/21/05 APPROVED: M. REED 03/21/05 APPROVED: J. BECHTOLD 04/21/05 APPROVED: R. WARNER 04/21/05 APPROVED:	SUBMITTED: MMT PROJECT: MAESTRO TITLE: INJECTION OPTICS PLATE PLOT SIZE: D SCALE: DRAWING NUMBER: 14260 REVISION: B CURRENT TIME/DATE/FILE LOCATION: DRAWING ARCHIVE LOCATION: http://dwfnet.ca.arizona.edu/mmt/14260.html	SHEET 2 OF 3