REVISIONS				
LTR	DESCRIPTION	DATE	REVISED BY	APPROVED
A	INITIAL RELEASE	03/29/05	J. BREMAN	G. LANDIS

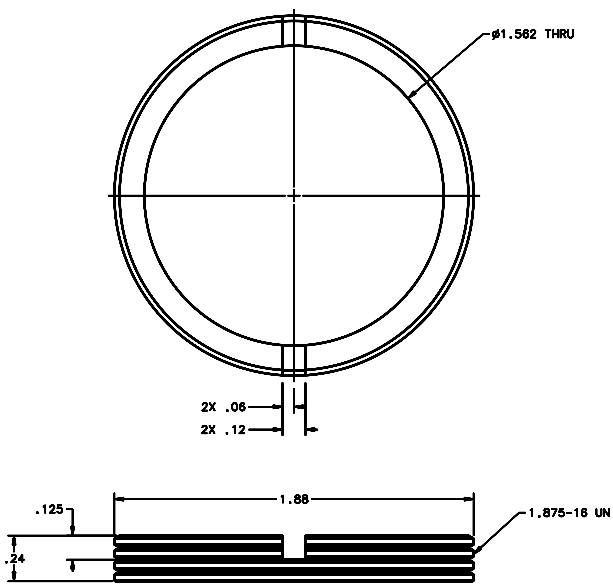

SCALE 4:1

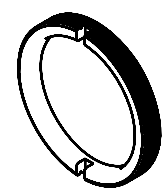

NOTES:
1. BREAK SHARP EDGES & DEBURR.
2. MACHINED SURFACE FINISH TO BE 125 RMS OR BETTER.
3. MACHINED FILLETS TO BE .015 MAX.
4. ANODIZE PER MIL-A-8625, TYPE II, CLASS 2 - BLACK.
5. ALL DIMENSIONS APPLICABLE BEFORE ANODIZING.
6. MACHINE TO DIMENSION AFTER THREADS HAVE BEEN CUT.

DO NOT SCALE DRAWING
INTERPRET DIMENSIONS AND TOLERANCES IN ACCORDANCE WITH ASME Y14.5M-94

TOLERANCES
UNLESS OTHERWISE SPECIFIED
LINEAR ANGULAR
.X = ± ± 1°
.XX = ±.03
.XXX = ±.005
DIMENSIONAL
SEE SPEC S-002

MATERIAL
ALLOY 360 ULTRA-MACHINABLE BRASS

FINISH 4

THIS DRAWING CREATED IN:
ACAD ☐ MECH ☐ IDEAS ☒

NEXT ASSY	USED ON
14268	MMT-MAESTRO

ASSEMBLY APPLICATION

Steward Observatory, University of Arizona
933 N. Cherry Avenue, Tucson, AZ 85721 (520)621-7659

DESIGNED BY: D. DEAN	DATE: 09/27/04	SUBMITTY: MMT
DRAWN BY: R. ABALDO	09/27/04	PROJECT: MAESTRO
CHECKED BY: G. LANDIS	09/27/04	TITLE: INJECTION OPTICS LENS CAN THREADED RING
APPROVED: M. REED	09/27/04	
APPROVED:		
APPROVED:		
APPROVED:		

PLOT SIZE	SCALE:	DRAWING NUMBER:	REVISION:
D	-	14239	A

CURRENT TIME/DATE/FILE LOCATION:
DRAWING ARCHIVE LOCATION: http://dmfsof.ac.arizona.edu/mmt/dmfsof1.html

SHEET 1 OF 1