REVISIONS				
LTR	DESCRIPTION	DATE	REVISED BY	APPROVED
A	INITIAL RELEASE	5/9/05	R. NAGY	G. LANDIS
B	UPDATED FOR ITEMS 1, 2, & 4 REVISIONS	9/22/05	R. NAGY	W. DAVISON

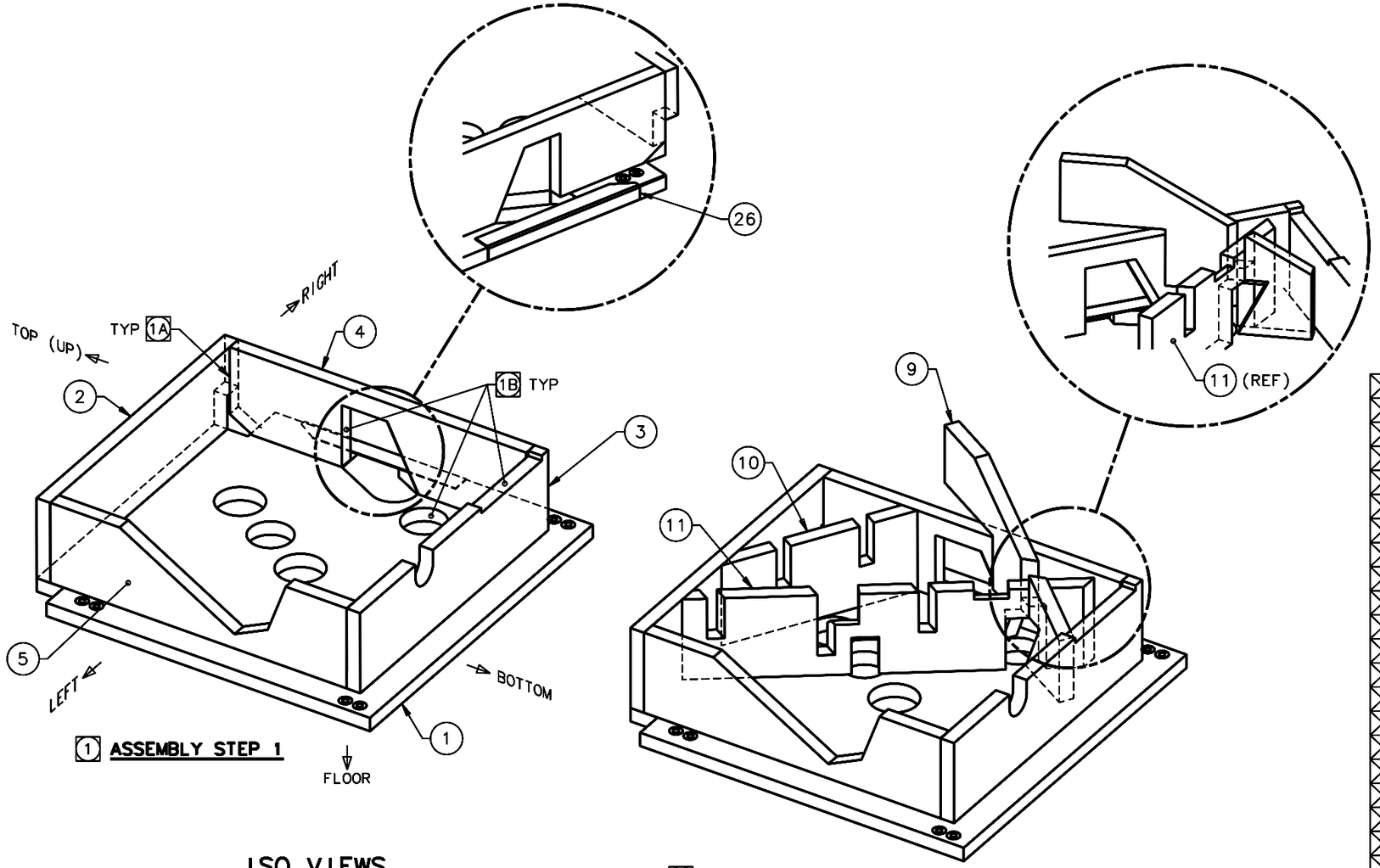

ISO VIEWS

SCALE NTS
CONTINUED ON SHTs 2 THRU 4;
ADDITIONAL ASSEMBLY VIEWS ON SHT 5

QTY PER ASSY -3	-2	-1	PART NUMBER	PART DESCRIPTION	MANUFACTURER or MAT'L SPEC	ITEM NO.
		AR	TBD	ADHESIVE		28
						27
		1	14501	FLOOR STIFFENER		26
		1	14448	CORNER BRACE BRIDGE		25
		1	14447	CORNER BRACE 2		24
		6	13737-6	INBOARD CORNER CLIP 6 (5.00 x 114°)		23
		4	13737-5	INBOARD CORNER CLIP 5 (5.00 x 90°)		22
		5	13737-4	INBOARD CORNER CLIP 4 (3.88 x 90°)		21
		1	13737-3	INBOARD CORNER CLIP 3 (3.00 x 114°)		20
		1	13737-2	INBOARD CORNER CLIP 2 (2.00 x 114°)		19
		2	13737-1	INBOARD CORNER CLIP 1 (1.50 x 98°)		18
		1	13718	GRATING CELL MOUNT ASSEMBLY		17
		1	13735	UPPER STIFFENER		16
		1	13734	FRAME BRACE 4		15
		1	13733	CORNER BRACE 1		14
		1	13732	COVER		13
		1	13731	FRAME BRACE 3		12
		1	13730	FRAME BRACE 2		11
		1	13729	FRAME BRACE 1		10
		1	13728	GRATING CELL MOUNT SUPPORT 4		9
		1	13727	GRATING CELL MOUNT SUPPORT 3		8
		1	13726	GRATING CELL MOUNT SUPPORT 2		7
		1	13725	GRATING CELL MOUNT SUPPORT 1		6
		1	13724	LEFT WALL		5
		1	13723	RIGHT WALL		4
		1	13722	BOTTOM WALL		3
		1	13721	TOP WALL		2
		1	13436	FLOOR W/INSERTS		1

LIST OF MATERIALS

NOTES:

1. USING ITEM 28 ADHESIVE AS REQUIRED:
   A. BOND TOGETHER RESPECTIVE MATING ITEMS.
   B. SEAL ALL EXPOSED COMPOSITE PANEL EDGES NOT USED FOR SUBSEQUENT BONDING TO OTHER PANELS.
2. PER PAINTING DETAIL (SHT 4):
   ALL SURFACES/EDGES, EXCEPT AS NOTED, ARE TO BE PRIMED WITH McMASTER-CARR 75035T44 OR EQUIVALENT WATER-BASED GRAY PRIMER & THEN PAINTED WITH 75035T41 OR EQUIVALENT WATER-BASED FLAT BLACK.
3. (1) REQUIRED PER NEXT ASSEMBLY.

DO NOT SCALE DRAWING

INTERPRET DIMENSIONS AND TOLERANCES IN ACCORDANCE WITH ASME Y14.5M-94

TOLERANCES UNLESS OTHERWISE SPECIFIED

LINEAR	ANGULAR
.X = NA	NA
.XX = NA	
.XXX = NA	

DIAMETRICAL
SEE SPEC S-002

DIMENSIONS ARE IN INCHES / DIMENSIONS IN [ ] ARE METRIC

MATERIAL
-

FINISH
-

THIS DRAWING CREATED IN: ACAD ☐ MECH ☐ IDEAS ☒

NEXT ASSY	USED ON
13677	MMT

ASSEMBLY APPLICATION

Steward Observatory, University of Arizona
933 N. Cherry Avenue, Tucson, AZ 85721 (520)621-7659

DESIGNED BY: S.MATHEWS/D.DEAN	DATE: 9/22/03	CATEGORY: MMT	
DRAWN BY: R. NAGY	2/20/04	PROJECT: MAESTRO	
CHECKED BY: G. LANDIS	3/21/05	TITLE: GRATING CELL PLATFORM ASSEMBLY	
APPROVED: J. BECHTOLD	5/9/05		
APPROVED: R. WARNER	5/9/05		
APPROVED:		PLOT SIZE: D	SCALE: -
APPROVED:		DRAWING NUMBER: 13435	REVISION: B

CURRENT TIME/DATE/FILE LOCATION:
DRAWING ARCHIVE LOCATION: http://davinci.as.arizona.edu/acad/default.html