REVISIONS				
LTR	DESCRIPTION	DATE	REVISED BY	APPROVED
A	INITIAL RELEASE	06/03/05	J. BREHMAN	G. LANDIS

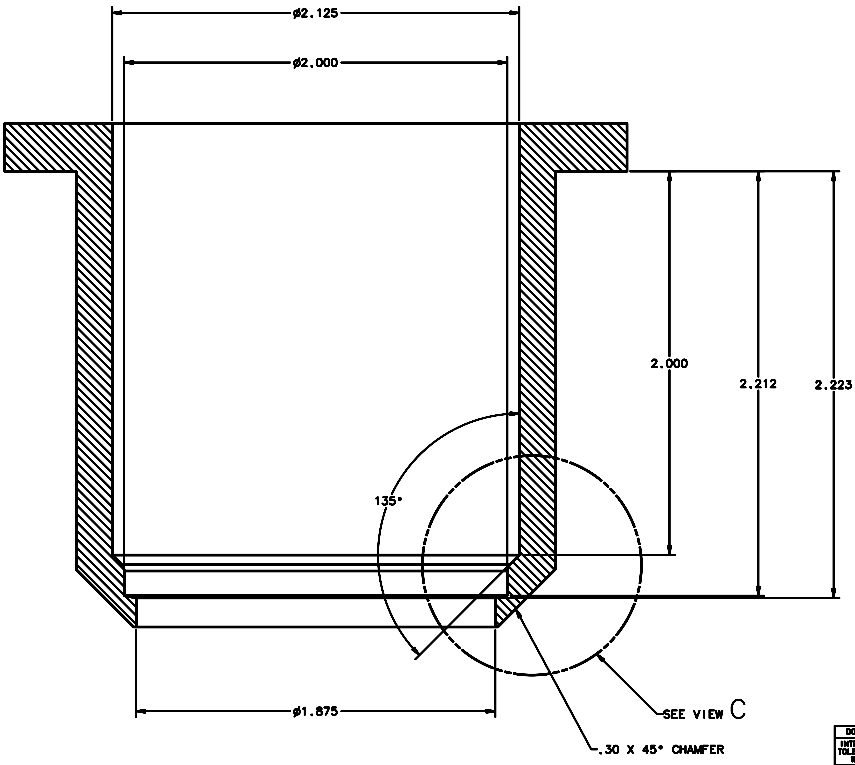

VIEW B-B
SHT 2
SCALE 4:1

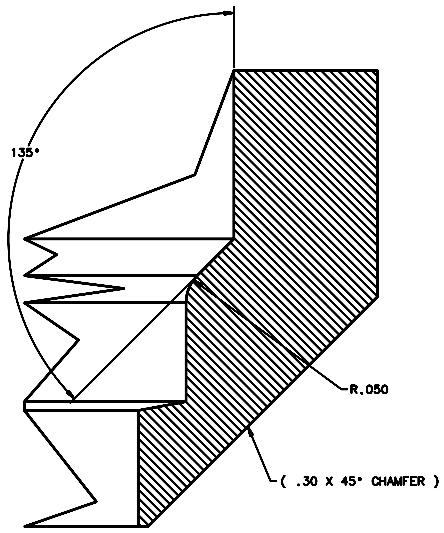

VIEW C
THIS SHT
SCALE 16:1

DO NOT SCALE DRAWING
INTERPRET DIMENSIONS AND TOLERANCES IN ACCORDANCE WITH ASME Y14.5M-94

TOLERANCES
UNLESS OTHERWISE SPECIFIED
LINEAR ANGULAR
.X = ± ± 1°
.XX = ± 0.05
.XXX = ± 0.005
DIMENSIONAL
SEE SPEC S-002

MATERIAL
AL ALLOY 6061-T6

FINISH 4

THIS DRAWING CREATED IN:
ACAD ☐ MECH ☐ IDEAS ☒

NEXT ASSY	USED ON
14452	MMT-MAESTRO

ASSEMBLY APPLICATION

Steward Observatory, University of Arizona
933 N. Cherry Avenue, Tucson, AZ 85721 (520)621-7659

DESIGNED BY: D. DEAN	DATE: 12/13/04	SUBMITTED: MMT
DRAWN BY: R. ABALDO	12/13/04	PROJECT: MAESTRO
CHECKED BY: G. LANDIS	03/21/05	TITLE: CALIBRATION LENS CAN
APPROVED: M. REED	06/03/05	
APPROVED: J. BECHTOLD	06/03/05	
APPROVED: R. WARNER	06/03/05	PLOT SIZE: D SCALE: - DRAWING NUMBER: 14465 REVISION: A
APPROVED:		

CURRENT TIME/DATE/FILE LOCATION:
DRAWING ARCHIVE LOCATION: http://dwfnet.ca.arizona.edu/mmt/default.html

SHEET 3 OF 3