REVISIONS				
LTR	DESCRIPTION	DATE	REVISED BY	APPROVED
A	INITIAL RELEASE	03/29/05	J. BRENNAN	G. LANDIS

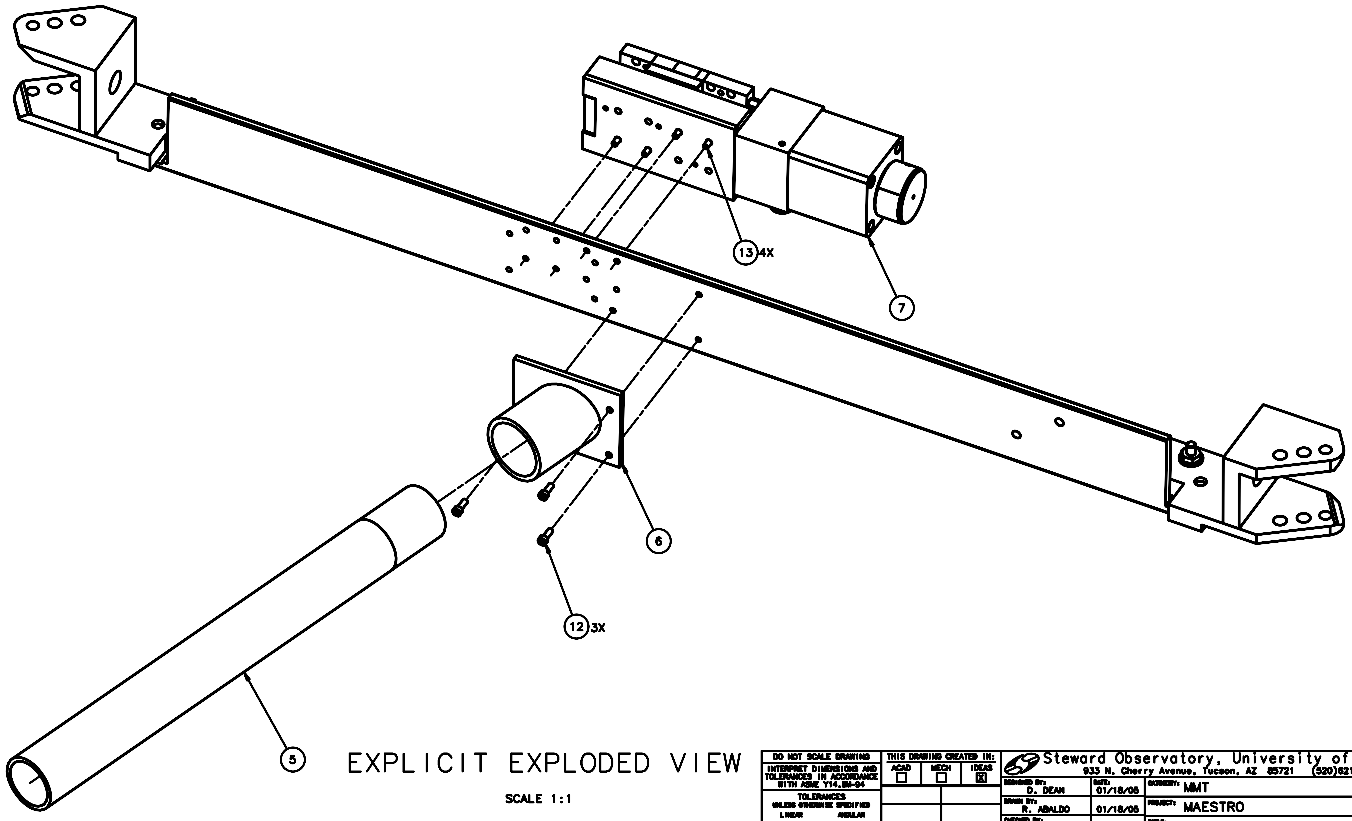

EXPLICIT EXPLODED VIEW

SCALE 1:1

DO NOT SCALE DRAWING

INTERPRET DIMENSIONS AND TOLERANCES IN ACCORDANCE WITH ASME Y14.5M-94

TOLERANCES
UNLESS OTHERWISE SPECIFIED
LINEAR: X ± X, XX ± 0.05, XXX ± 0.025
ANGULAR: ± 1°
DIMENSIONS: MM SCAL 0-025

THIS DRAWING CREATED IN: ACAD ☐ MECH ☐ IDEAS ☒

DESIGNED BY:	D. DEAN	01/18/05
DRAWN BY:	R. ABALDO	01/18/05
CHECKED BY:	G. LANDIS	01/18/05
APPROVED:	M. REED	01/18/05
APPROVED:		
APPROVED:		

MATERIAL

14440	MMT-MAESTRO
NEXT ASSY	USED ON

FINISH

ASSEMBLY APPLICATION

Steward Observatory, University of Arizona
933 N. Cherry Avenue, Tucson, AZ 85721 (520)621-7556

COMPANY: MMT

PROJECT: MAESTRO

TITLE: CALIBRATION MOUNTING ASSEMBLY

PLOT SIZE: D | SCALE: - | DRAWING NUMBER: 14450 | REVISION: A

CURRENT TIME/DATE/FILE LOCATION:

DRAWING ARCHIVE LOCATION: http://steweb.as.arizona.edu/mmt/Maestro1.html

SHEET 3 OF 3